Application Notes

SESTILIO

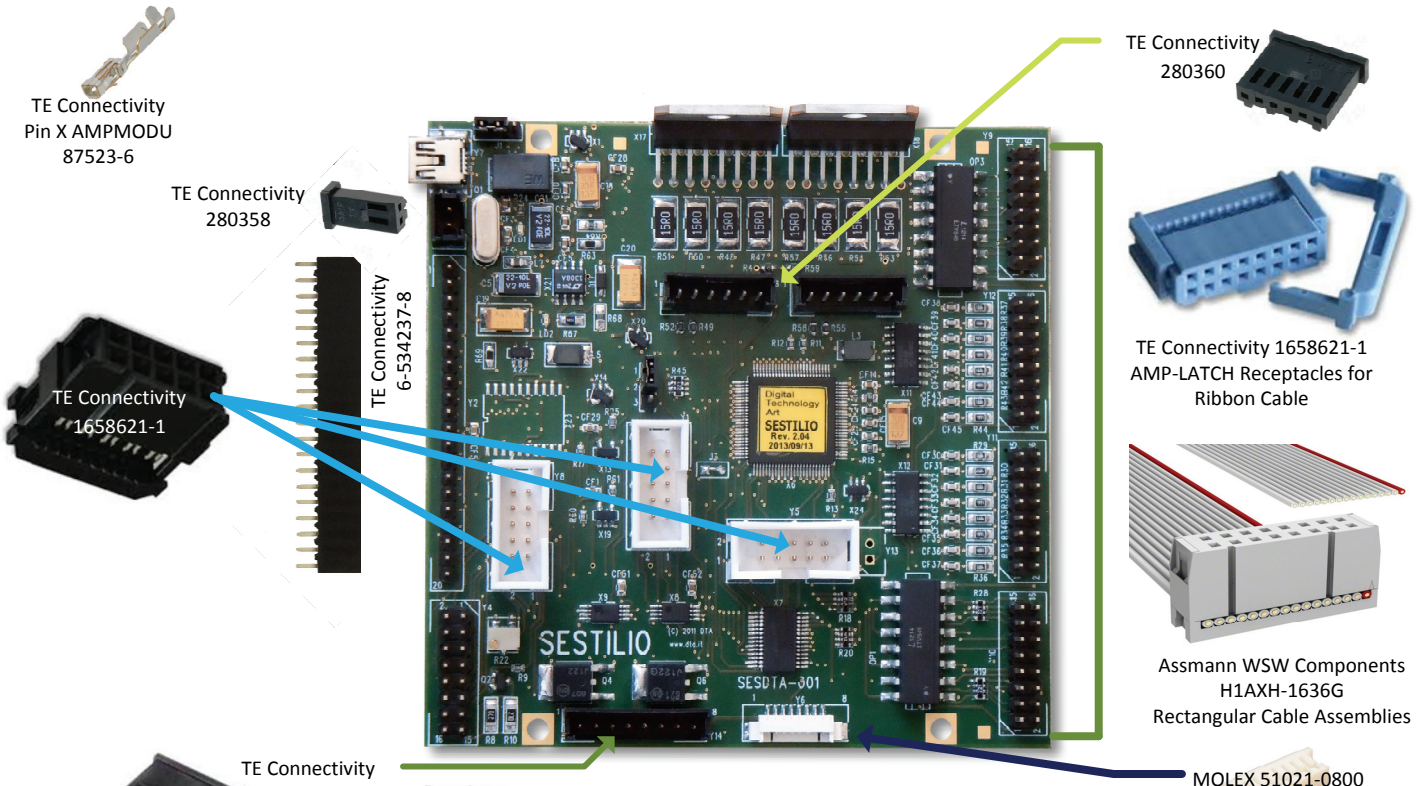

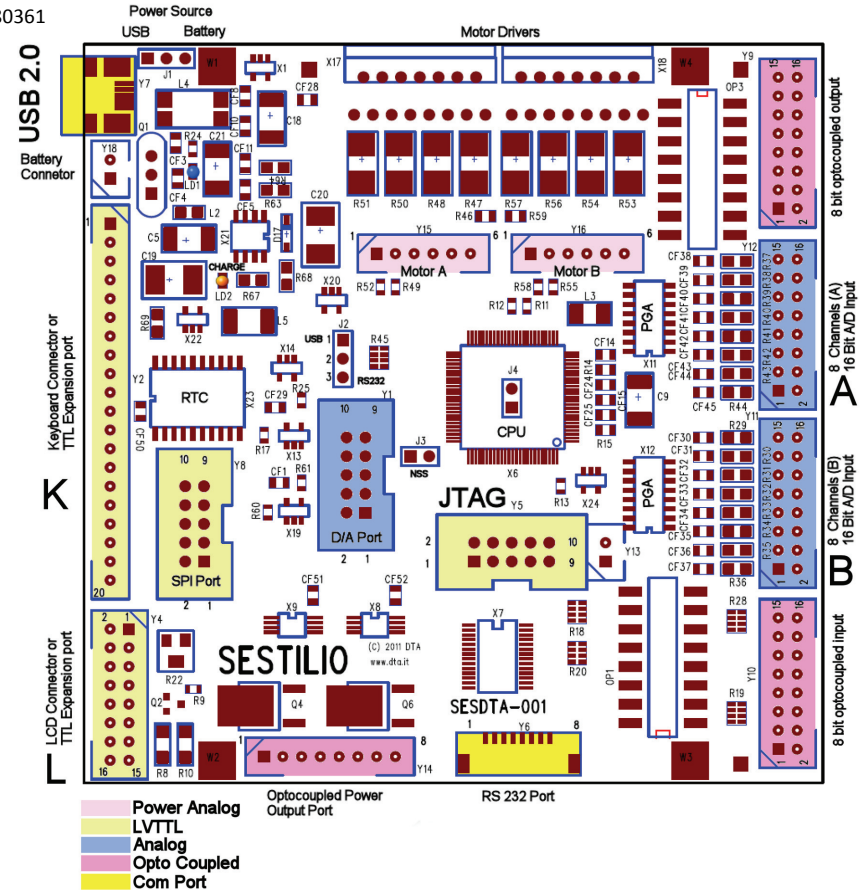

Via G. Cei 67, 56021 Cascina, PISA - ITALY
Tel: +39 050 8665471
FAX: +39 050 8665471
www.officinaturini.com

16 CHANNEL A/D CONVERTER

The first general purpose use is as A/D sampler.
Dual fast (1MHz) 16bit A/D converter with input multiplexer and digitally programmable gain.
The first main characteristics is a very low noise of the system.

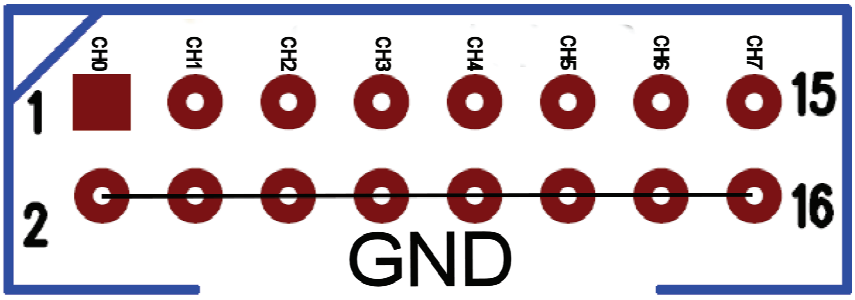

Y11-Y12 A/D connector, impedance 20K 0-10V input

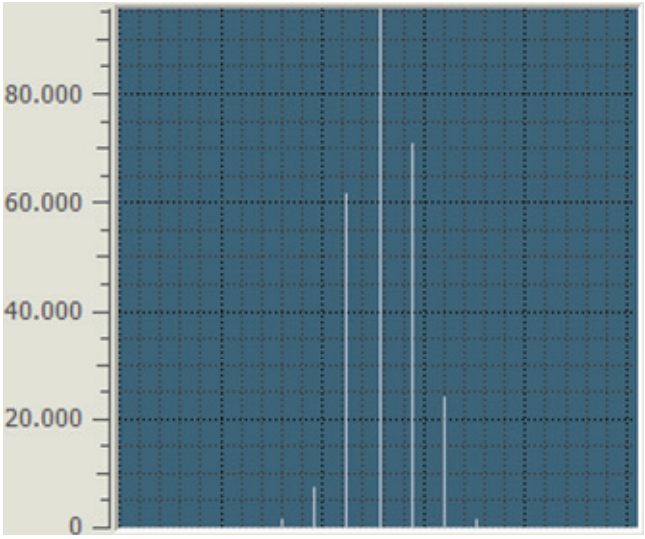

Histogram of 262144 samples @ 1MHz (Input open)
STD 1.075

C code example for slow scan mode

```
#include "sest.h"
if(SE_Open('0', 0) == SE_S_SUCCESS)
{
    // Dump all 16 channels
    for(int ch = 0; ch < 16; ch++)
        printf("CH[%2d] = %6.3lfV\n", ch, SE_ADV((double) SE_ReadAnalog(ch, 1, 0)));
    SE_Close(0);
}
```

C code example for fast scan mode

```
#include "sest.h"
if(SE_Open('0', 0) == SE_S_SUCCESS)
{
    unsigned short int mem[1024];                   // Storage area for sampled data
    SE_SetMux(0, 0);                                // Set channel 0 on AD0
    SE_FastReadAnalog(0, 0, 2, 1024, 0);            // Grab 1024 samples from AD0 @ 500KHz
    SE_GetSampleData(SE_RAM_0, 0, 1024, mem, 0);    // Get sampled data
    // Dump sampled data
    for(int i = 0; i < 1024; i++)
        printf("[%04d] = %6.3lfV\n", i, SE_ADV((double) mem[i]));
    SE_Close(0);
}
```

UP TO 16 CHANNEL TEMPERATURE MONITOR

A simple application to read the temperature in the range -55°C to +150°C
Main power is supplied by USB.
Off course a different power supply can be used for the AD590.

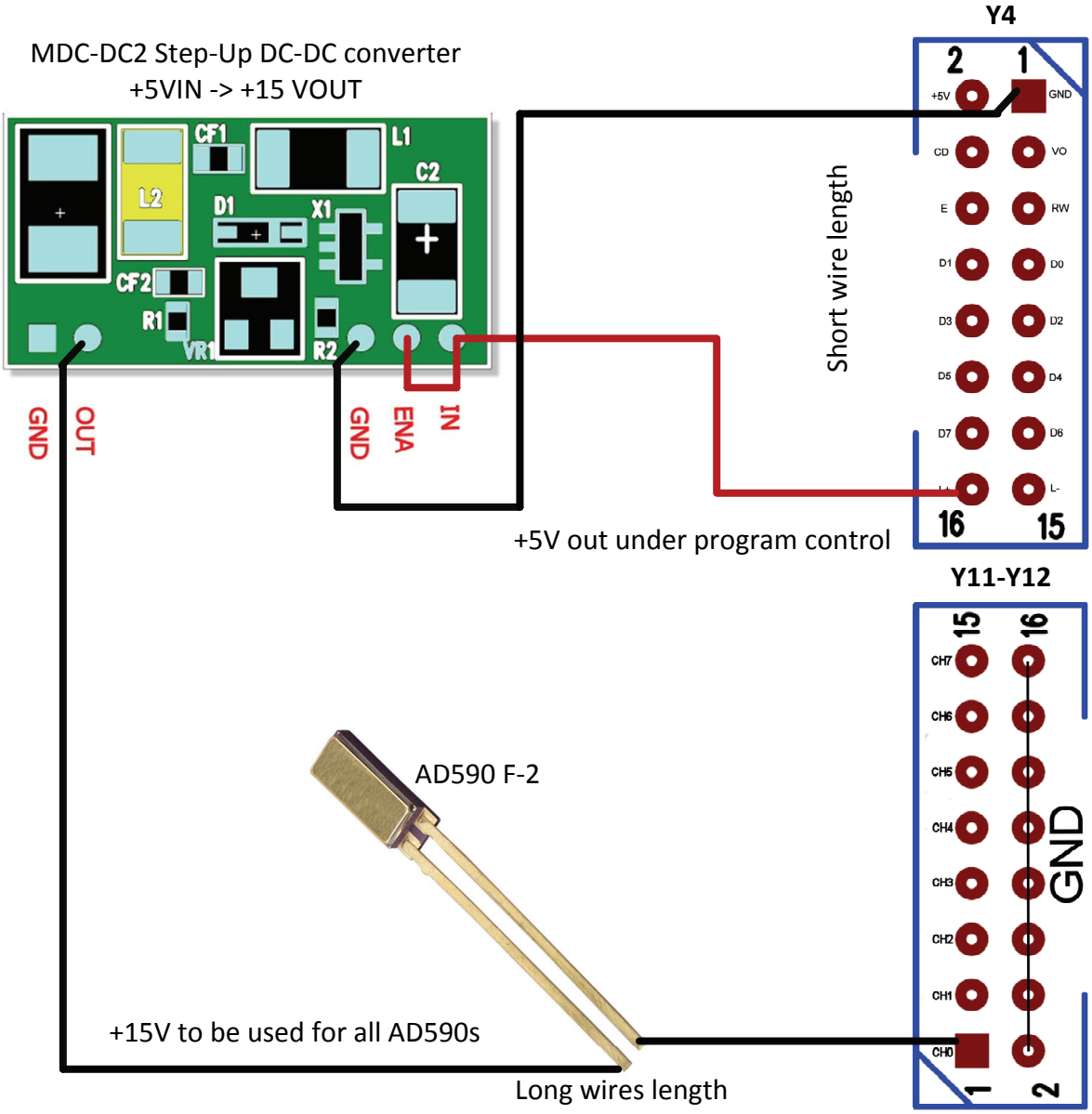

C code example

```
// Optional instruction
SE_AuxPower(1, 0);  // Turn on the power (+5V) on pin Y4.16 for DCDC converter
// Read temperature (K) on 16 channels
for(int i = 0; i < 16; i++)
    printf("CH[%2d] = %5.1lf K\n", i, (double) SE_ReadTemperature(i % 2, i % 8, 10, usbDevice) / 1000.0);
```

SESTILIO

UP TO 8 CHANNEL HIGH PRECISION DC AMMETER

A simple application to read the current with high precision.
Sestilio is powerd by USB.
R1 is resistor .1 OHM 5W 1% 4527 SMD ±75ppm/°C PN: WSR5R1000FEA by Vishay Dale .

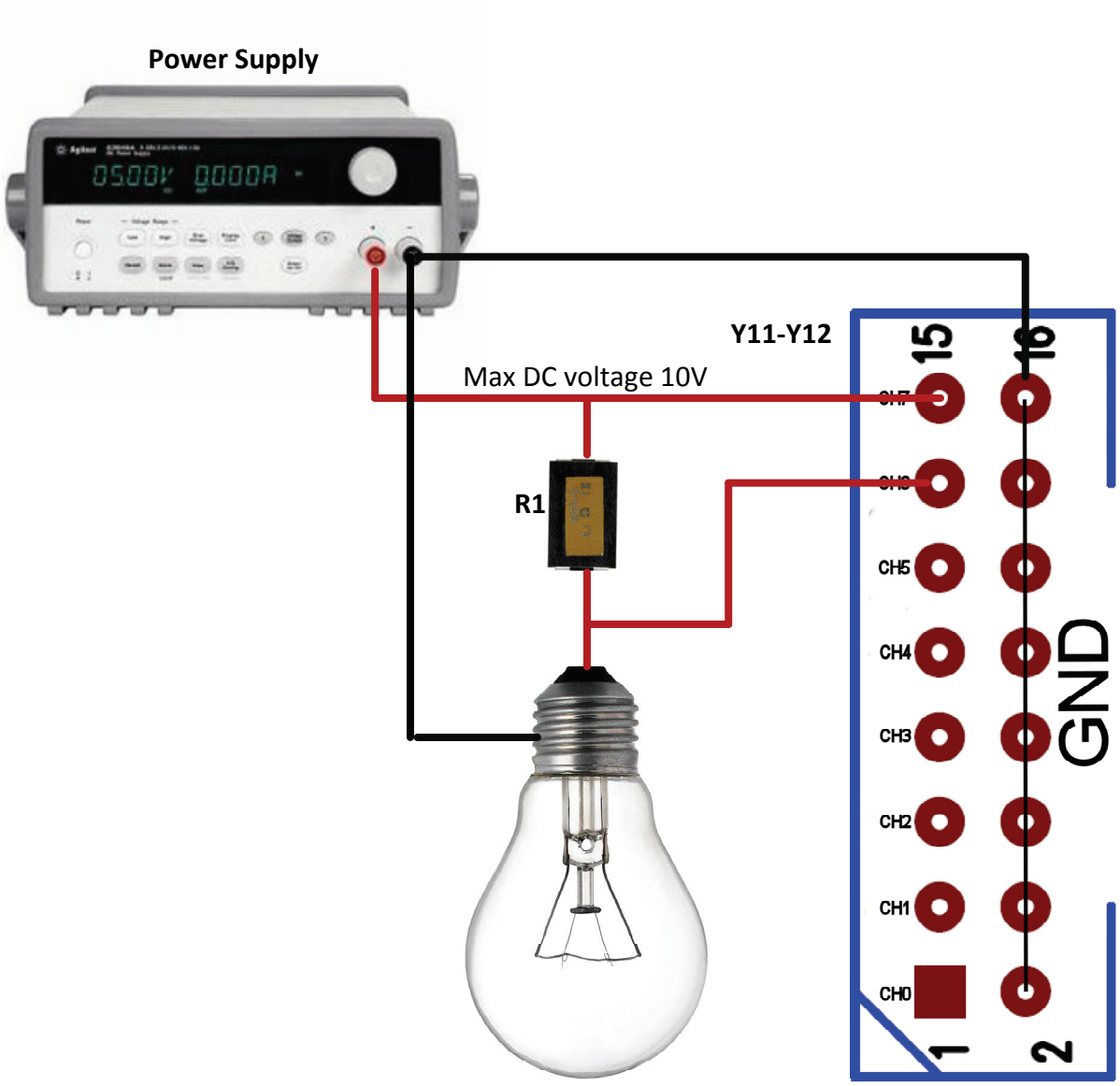

C code example

```
// Four channel ammeter
for(int i = 0; i < 4; i++)
    printf("I[%2d] = %5.3lf A\n", i, (double) SE_ReadCurrent(0, i, i + 4, 3, 0.1, usbDevice) / 1000.0);
```

SESTILIO

UP TO 2 STEP-MOTORS DRIVE

A complete handle of two step-motor drive, with acceleration and deceleration slope.
2 amper per phase with a supply voltage from 9 to 40V.
Half-Step, Full-Step mode, Enable/Disable and current reduction .

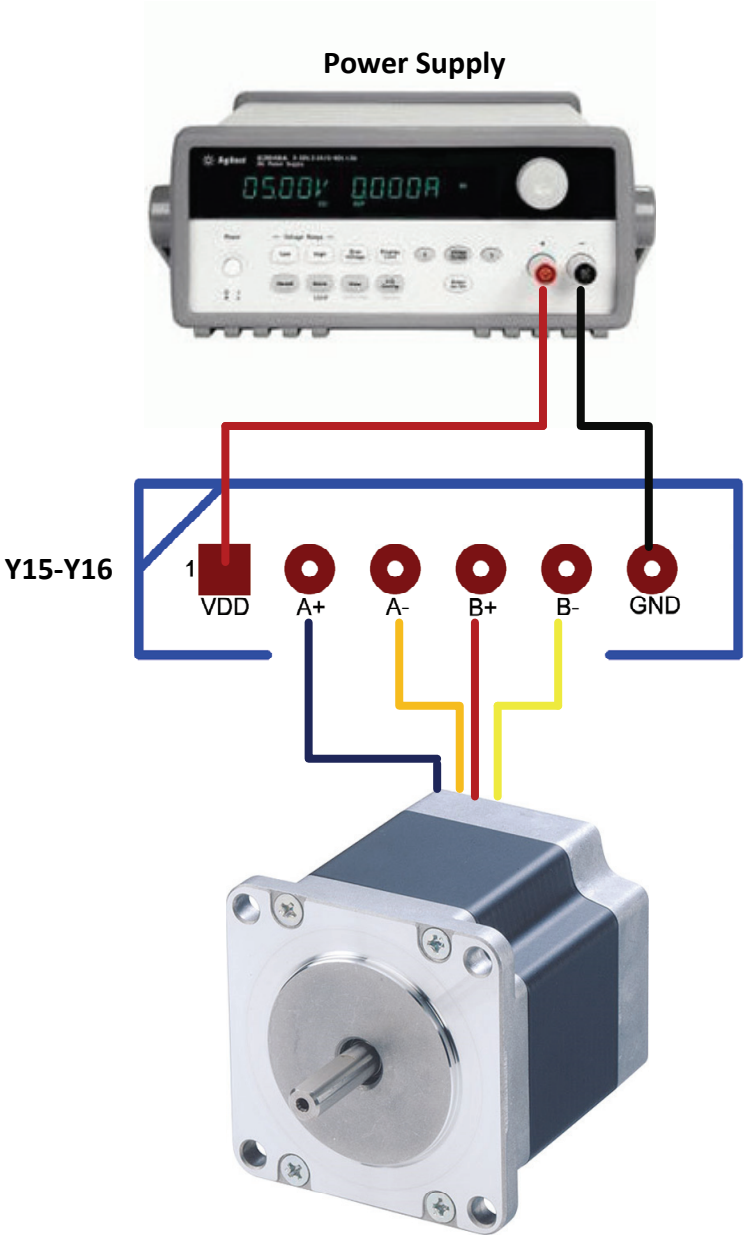

C code example

```
#include "sest.h"
if(SE_Open('0', 0) == SE_S_SUCCESS)
{
    // Execute 4500 steps in Clock Wise direction on motor A also execute 2500 steps
    //          in Counter Clock Wise direction on motorB
    SE_MotorPositioning(SE_MOT_DIR_CW, 4500, SE_MOT_DIR_CCW, 2500, 0);
    // Wait end of positioning
    while(SE_ReadMotorCount(SE_MOT_A, 0) || SE_ReadMotorCount(SE_MOT_B, 0));
    SE_MotorPositioning(SE_MOT_DIR_CCW, 2500, SE_MOT_DIR_CW, 4500, 0);
    // Wait end of positioning
    while(SE_ReadMotorCount(SE_MOT_A, 0) || SE_ReadMotorCount(SE_MOT_B, 0));
    SE_MotorPositioning(SE_MOT_DIR_CW, 2000, SE_MOT_DIR_CCW, 2000, 0);
    // Wait end of positioning
    while(SE_ReadMotorCount(SE_MOT_A, 0) || SE_ReadMotorCount(SE_MOT_B, 0));
    // Turn OFF all motors
    SE_SetMotorEnable(SE_MOT_A, SE_MOT_OFF, 0);
    SE_SetMotorEnable(SE_MOT_B, SE_MOT_OFF, 0);
    SE_Close(0);
}
```

UP TO 4 EXTERNAL STEP-MOTORS DRIVE CONTROLS

Additional four step motor can be controlled via SMD42 drive .
2 amper per phase with a supply voltage from 9 to 40V.
Clock and Direction signal are controlled .

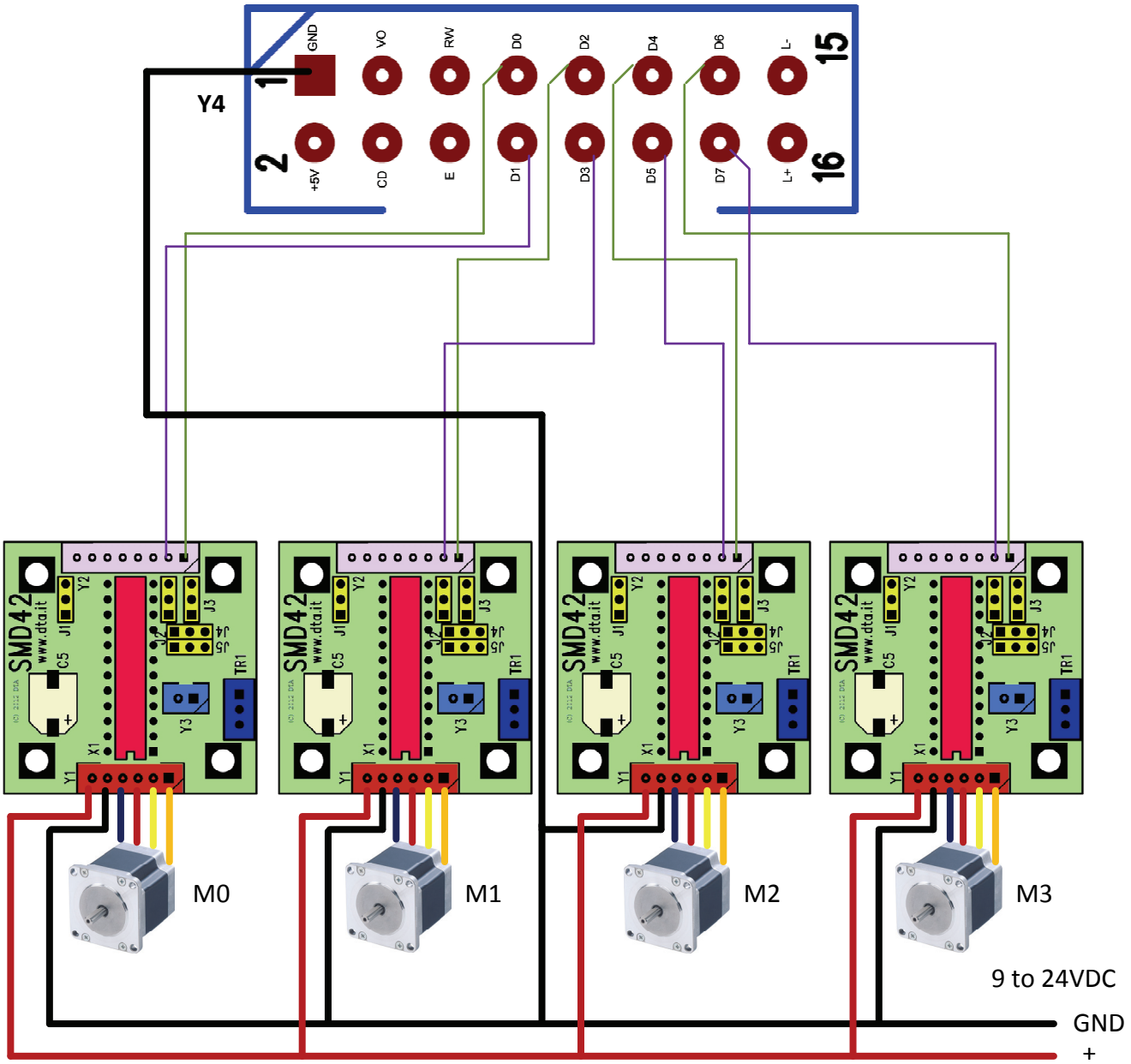

C code example

```
#include "sest.h"
if(SE_Open('0', 0) == SE_S_SUCCESS)
{
    // Execute 400 steps on motor id 0 with a frequency of 1KHz
    // Procedure return only at the end of positioning
    SE_AuxMotorPositioning(0, SE_MOT_DIR_CW, 400, 500, 0);
    SE_Close(0);
}
```

UP TO 4 DC MOTORS CAN BE CONTROLLED

Four DC motors can be controlled via internal drivers .
Up to 2A and from 9 to 40V as motor power supply.
Motor rotation (CW/CCW), current reduction, pulse or continous mode.

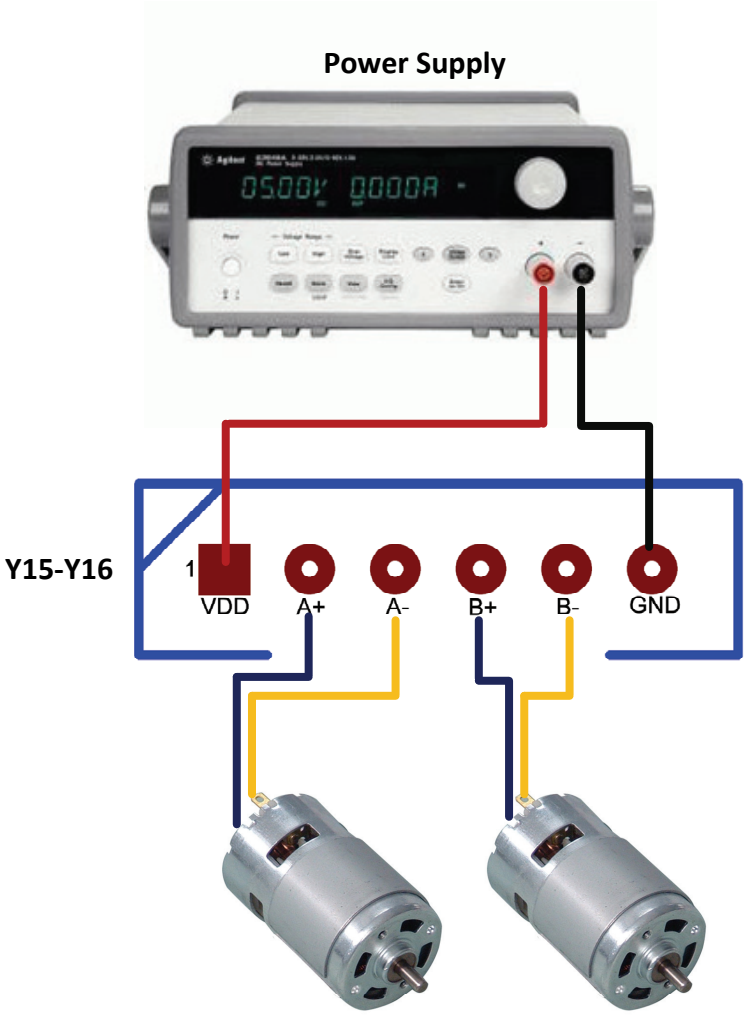

C code example

```
#include "sest.h"
if(SE_Open('0', 0) == SE_S_SUCCESS)
{
    // Y15:2-3 activate this motor until bit 0 on Opto-Isolated port
    // is active (0) but with a maximum timeout of one second
    SE_BridgeUntil(0, SE_BRIDGE_PN, SE_PORT_OPTO, 0, 0, 1000, 0);
    SE_Close(0);
}
```

UP TO 4 COILS CAN BE CONTROLLED

Four coils can be controlled via internal drivers .
Up to 2A and from 9 to 40V as coil power supply.
Current reduction, pulse or continous mode.

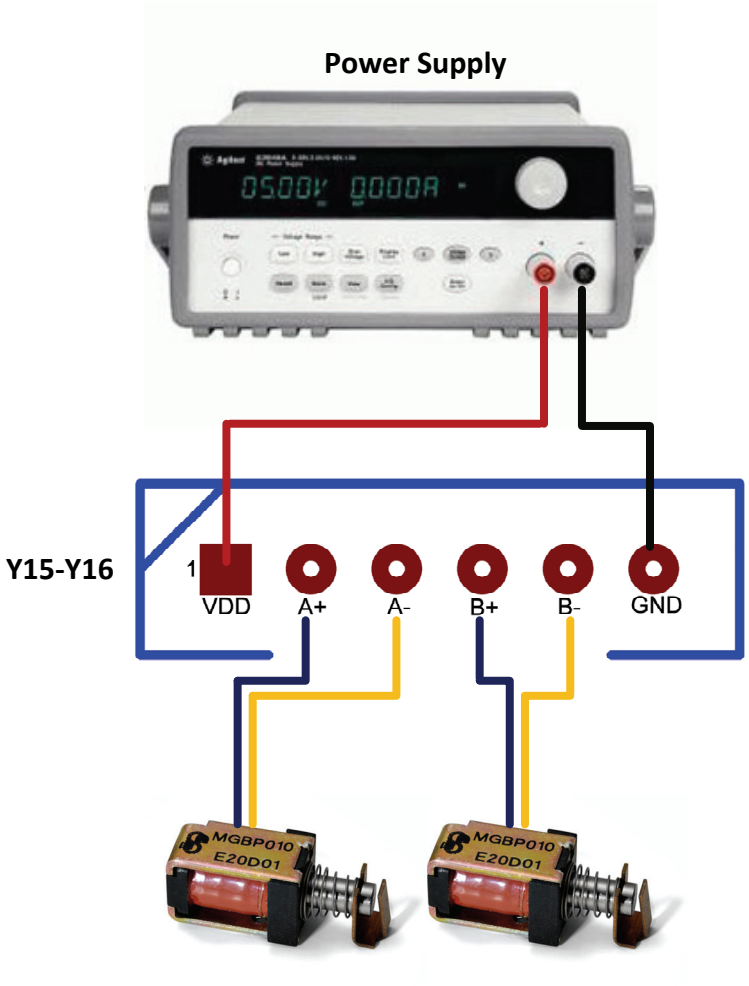

C code example

```
#include "sest.h"
if(SE_Open('0', 0) == SE_S_SUCCESS)
{
    // Y15:4-5 Activate the bridge 1 for 100 ms and deactivate it for 10ms
    SE_BridgePulse(1, SE_BRIDGE_PN, SE_BRIDGE_NN, 100, 10, SE_P_TB_1_MS, 0);
    SE_Close(0);
}
```

UP TO 8 OPTO-ISOLATED INPUT

8 opto-isolated input can be used to interface different inputs.
Below are shown different connections for different kind of switch.
Current reduction resistor must be inserted for voltages > 5V.

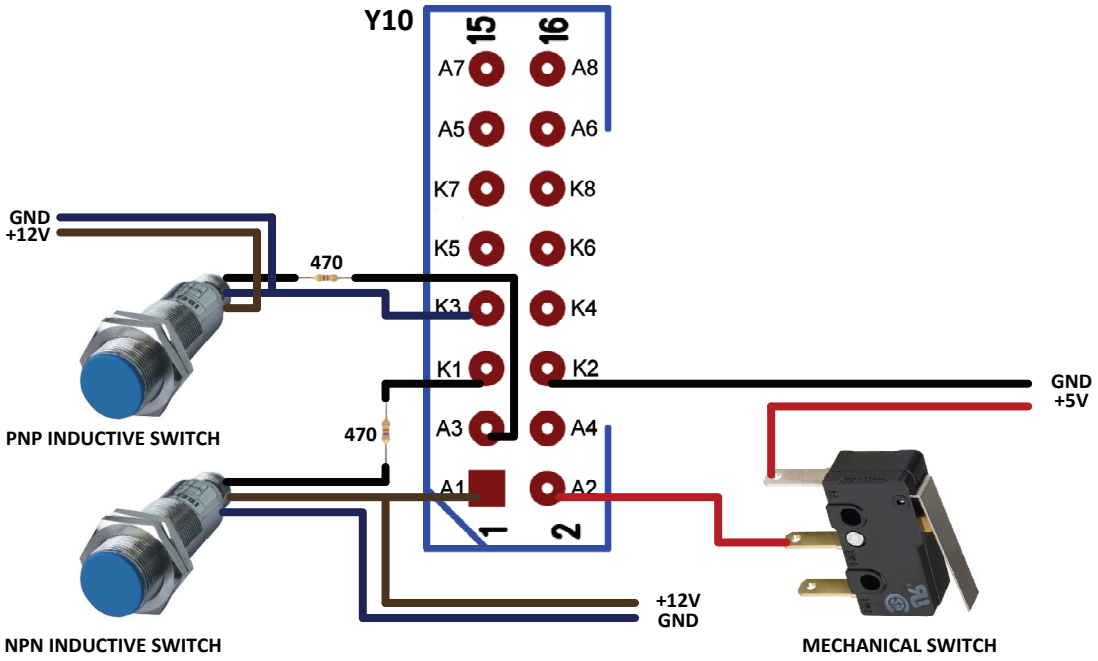

C code example

```
#include "sest.h"
if(SE_Open('0', 0) == SE_S_SUCCESS)
{
    int     ps; // Port status
    //
    ps = SE_ReadPort(SE_PORT_OPTO, 0);
    if(ps & 1)  // Check if bit 1 of the Opto-Isolated port is 1
        // Your code ...
    SE_Close(0);
}
```

UP TO 8 OPTO-ISOLATED OUTPUT

Connection used for a relay or solid state relay

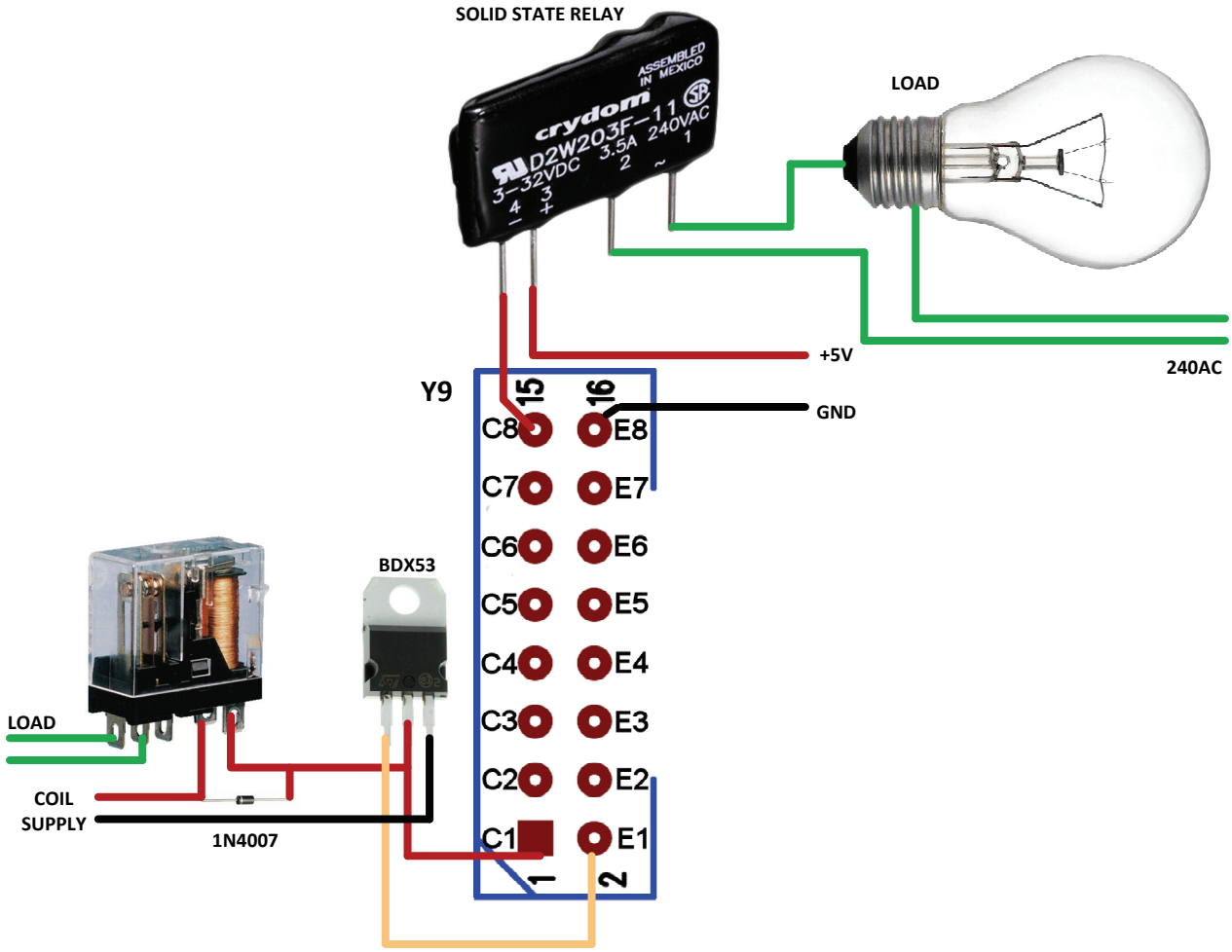

C code example

```
#include "sest.h"
if(SE_Open('0', 0) == SE_S_SUCCESS)
{
    // Turn ON output 1 and 8 on Opto-Isolated port (Y9)
    SE_WritePort(SE_PORT_OPTO, 0x81, 0);
    SE_Close(0);
}
```

UP TO 4 POWER OPTO-ISOLATED OUTPUT

Connection used for a relay or generic load up 1A

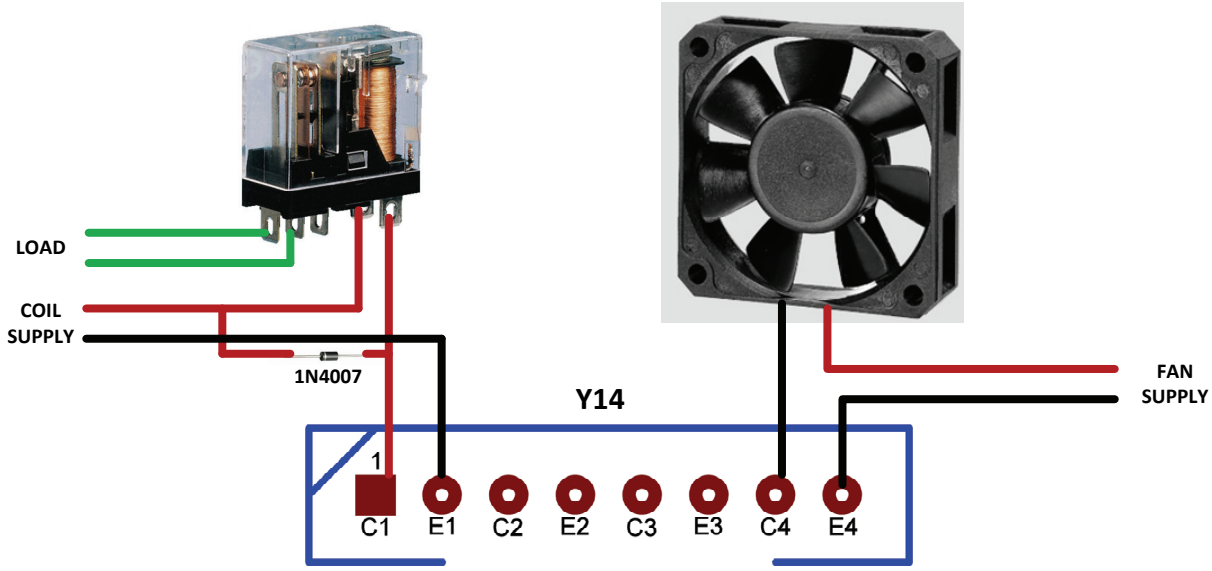

C code example

```
#include "sest.h"
if(SE_Open('0', 0) == SE_S_SUCCESS)
{
    // Turn ON output 1 and 4 on Opto-Power-Isolated port (Y14)
    SE_WritePort(SE_PORT_POWER, 0x05, 0);
    SE_Close(0);
}
```

```
#include "sest.h"
if(SE_Open('0', 0) == SE_S_SUCCESS)
{
    // Turn ON output 1 and 4 on Opto-Power-Isolated port (Y14)
    // output 1 will be active only for 1 second
    SE_PortPulse(SE_PORT_POWER, 0x05, 0x04, 1000, SE_P_TB_1_MS, 0);
    SE_Close(0);
}
```

UP TO 4 PID CONTROLLER

A complete temperature controller

Example hardware for a cooler temperature controlled using PID function.
The solution use a dissipative low noise mode.

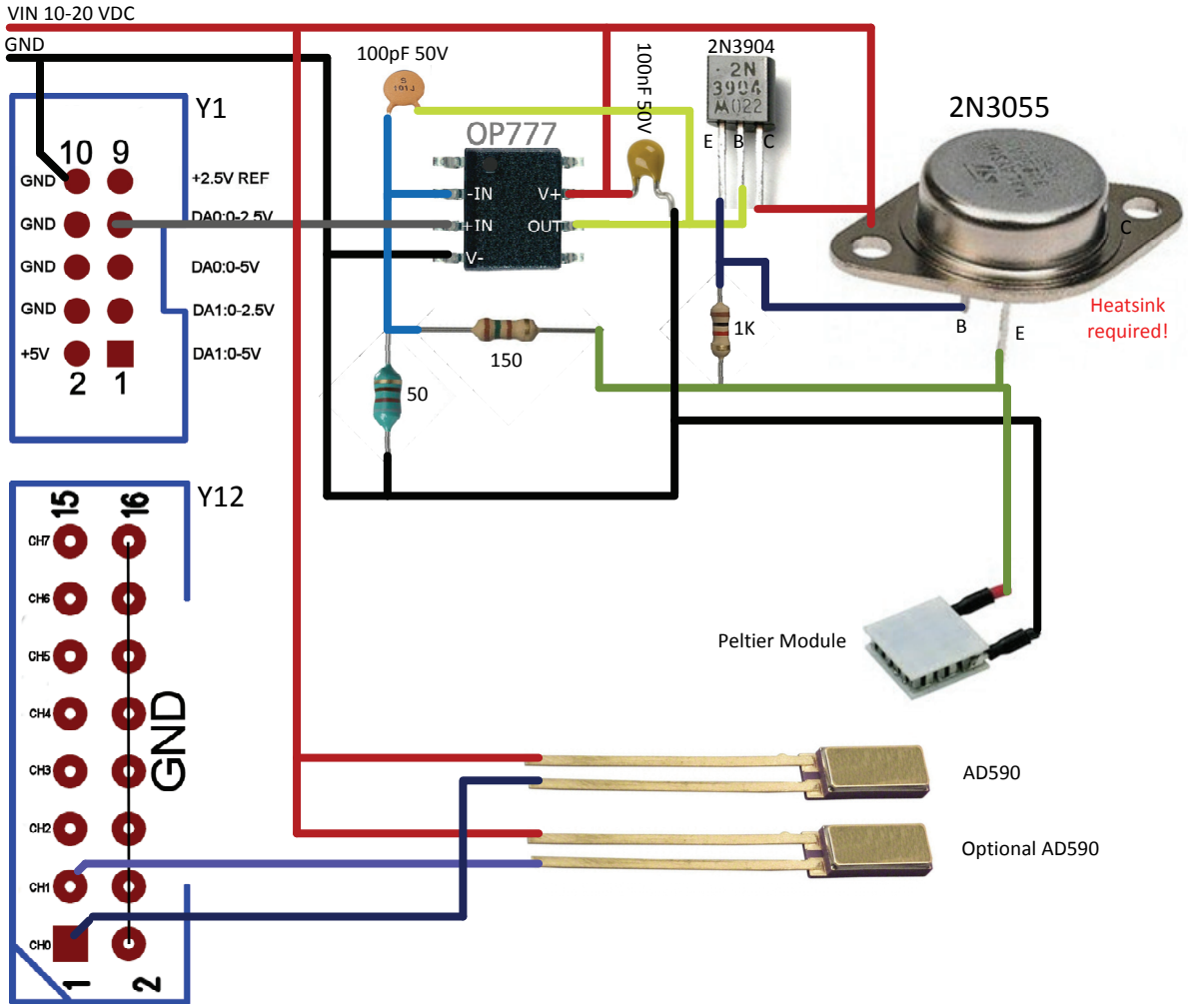

C code example

```
// Set a temperature control using as output DAC0 and as input AD channel 0 and 1 (average will be performed)
// Target temperature will be 270 Kelvin.
// AD590 are used for the temperature measurement.
SE_SetPID(0, SE_PID_OUT_DAC0, SE_PID_CHAN_00 + SE_PID_CHAN_01, SE_PID_UNIT_MK, 270000, 4095, 1, usbDevice);
```

UP TO 4 PID CONTROLLER

A complete temperature controller

Example hardware for a cooler temperature controlled using PID function.
The solution use an high efficiency PWM mode.

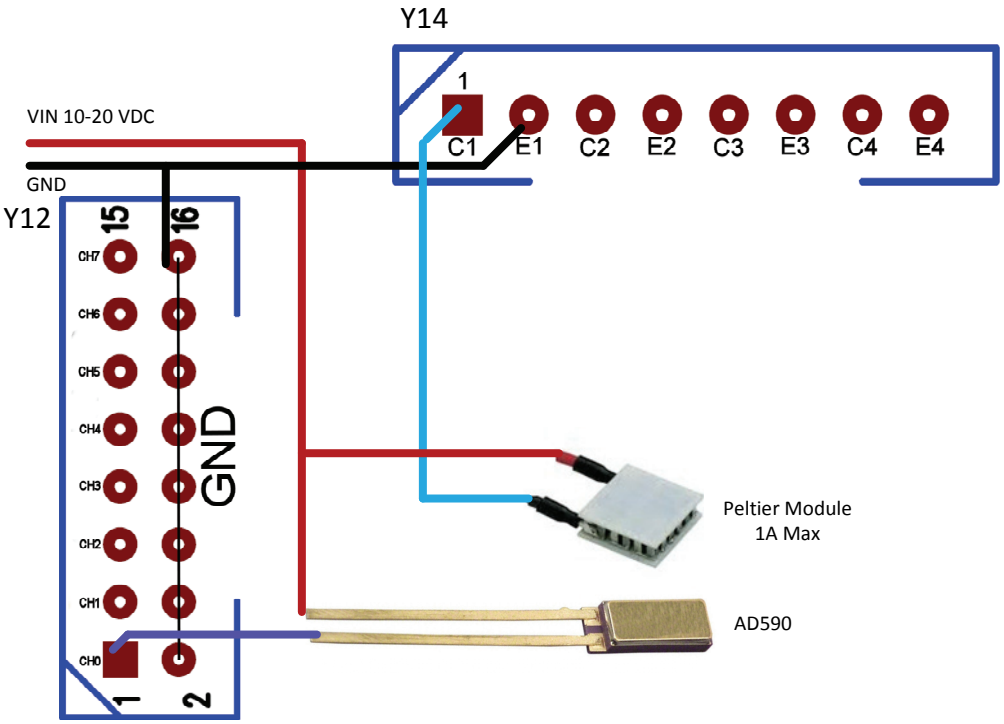

C code example

```
// Set a temperature control using a power opto-isolated output (PWM mode) and as input AD channel 0
// Target temperature will be 270 Kelvin.
// AD590 are used for the temperature measurement.
SE_SetPID(0, SE_PID_OUT_PWM, SE_PID_CHAN_00, SE_PID_UNIT_MK, 270000, 255, 1, usbDevice);
```

SESTILIO

PHOTOMETER

High sensitive and precison photometer

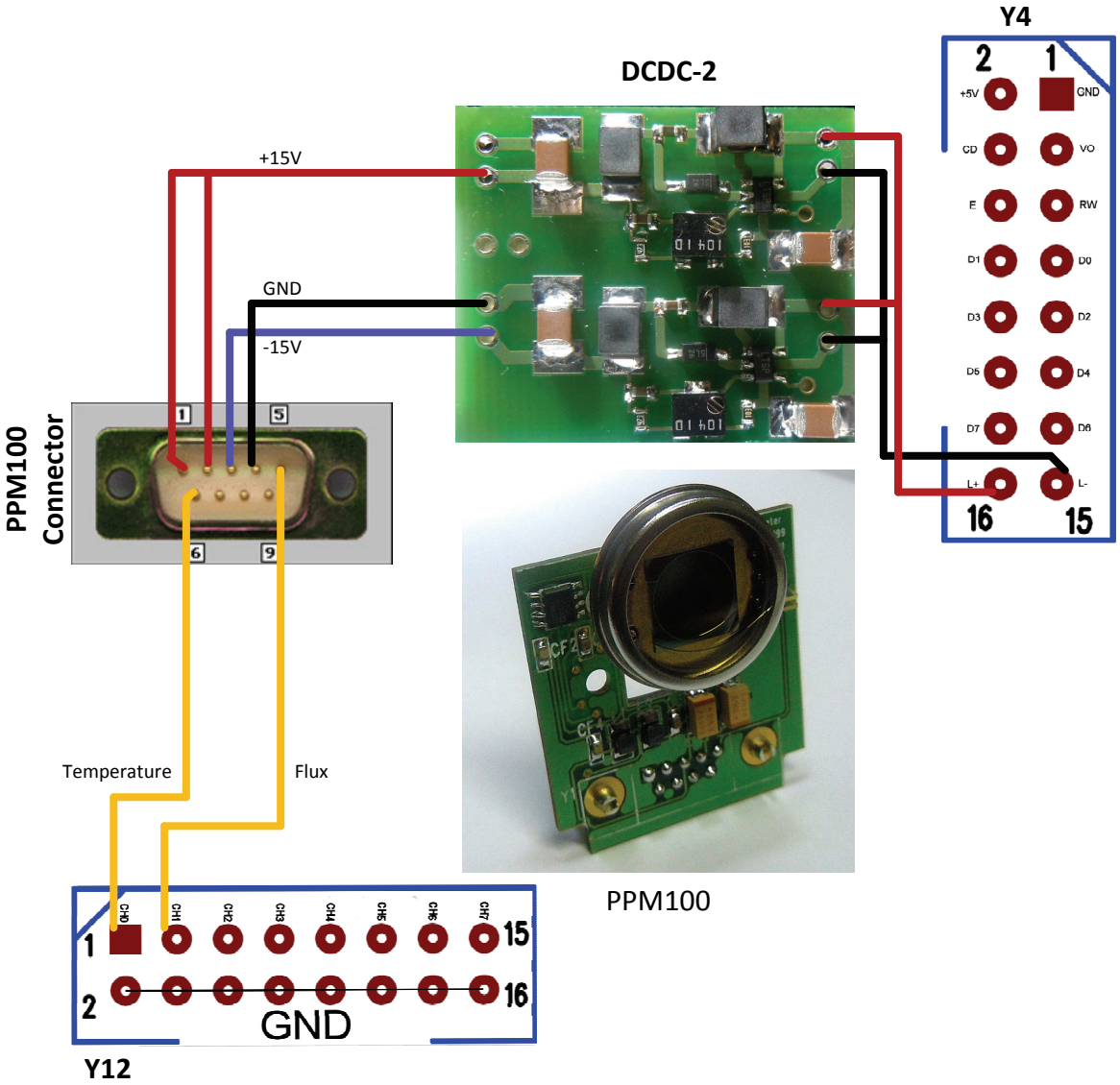

SESTILIO

OPTICAL SCANNER

With the optional module LINCAM-1 SESTILIO can be used to implement an image scanner.
The optical module is based on SONY ILX553B, a linear CCD sensor of 5150 pixel (7um pitch).
To achieve maximum performance there are several constraints:\n

- Used A/D 0 on available inputs from 0 to 7\n
- Used motor output B.\n
- One step of the motor for one line sampled.

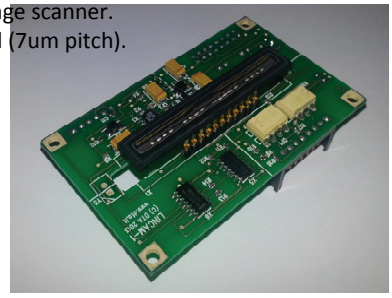

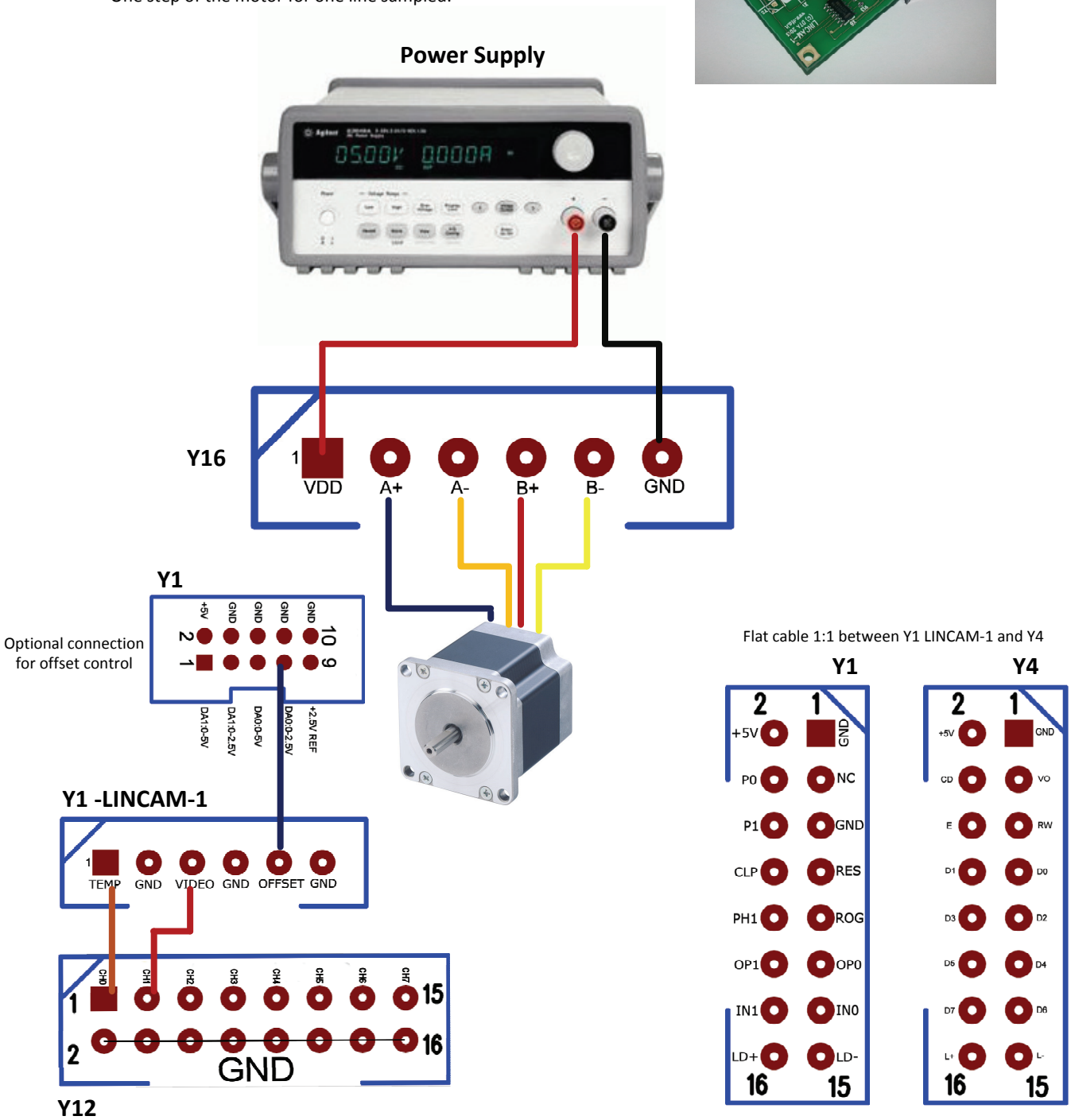

C code example

```
#include "sest.h"
if(SE_Open('0', 0) == SE_S_SUCCESS)
{
    unsigned short int * mem;
    mem = malloc(5150 * 1024 * sizeof(unsigned short int));
    // Acquire 1024 lines by 5150 pixel
    SE_LinearScanner(SE_MOT_DIR_CW, 1024, mem, 0);
    SE_Close(0);
}
```

SESTILIO